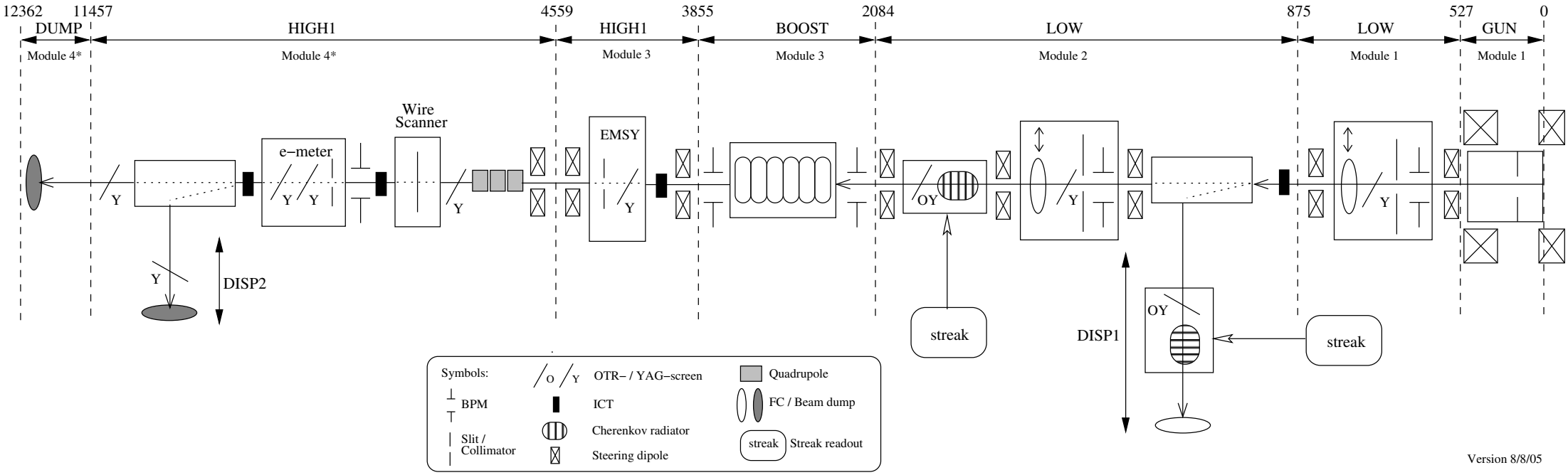
12362
11457
4559
3855
2084
875
527
0
DUMP
HIGH1
HIGH1
BOOST
LOW
LOW
GUN
Module 4*
Module 4*
Module 3
Module 3
Module 2
Module 1
Module 1
Wire Scanner
e−meter
EMSY
Y
OY
DISP2
DISP1
streak
streak
Symbols:
BPM
Slit / Collimator
OTR− / YAG−screen
ICT
Cherenkov radiator
Steering dipole
Quadrupole
FC / Beam dump
Streak readout
Version 8/8/05